Energy storage equipment price structure

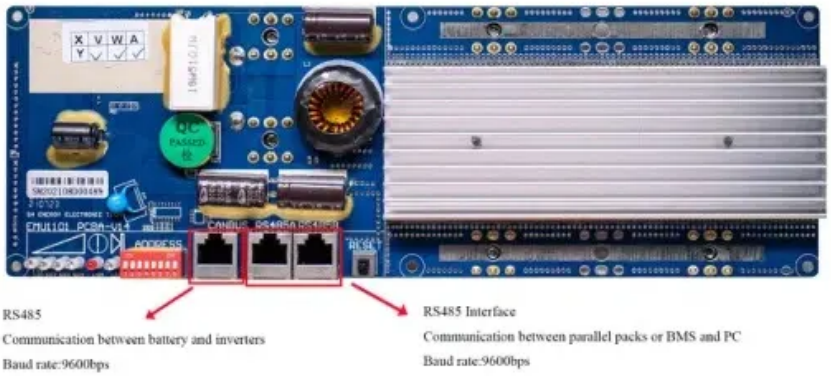

Overview

Energy storage equipment pricing varies significantly, influenced by several pivotal factors 1. Capacity and scale of storage systems, 3.

Energy storage equipment price structure

MIT Energy Initiative conference spotlights research

At the MIT Energy Initiative's Annual Research Conference, industry leaders agreed collaboration is key to advancing critical technologies amidst a changing energy landscape.

Explained: Generative AI's environmental impact

MIT News explores the environmental and sustainability implications of generative AI technologies and applications.

How artificial intelligence can help achieve a clean energy future

A look at how AI can be used to help support the clean energy transition by helping to manage power grid operations, plan infrastructure investments, guide the development of novel

Giving buildings an "MRI" to make them more energy-efficient and

Founded by a team from MIT, Lamarr.AI utilizes drones, thermal imaging, and AI to identify energy waste and structural issues in buildings and recommend retrofits.

2022 Grid Energy Storage Technology Cost and

The 2022 Cost and Performance Assessment provides the levelized cost of storage (LCOS). The two metrics determine the average price that a unit of energy

Energy Storage Technology and Cost Assessment: Executive

This is an executive summary of a study that evaluates the current state of technology, market applications, and costs for the stationary energy storage sector.

U.S. Solar Photovoltaic System and Energy Storage Cost

We show bottom-up manufacturing analyses for modules, inverters, and energy storage components, and we model unique costs related to community solar installations. We also account for PV

MIT engineers create an energy-storing supercapacitor from ancient

MIT engineers created a carbon-cement supercapacitor that can store large amounts of energy. Made of just cement, water, and carbon black, the device could form the basis for

Understanding ammonia energy's tradeoffs around the world

MIT Energy Initiative researchers calculated the economic and environmental impact of future ammonia energy production and trade pathways.

A new approach could fractionate crude oil using much less energy

MIT engineers developed a membrane that filters the components of crude oil by their molecular size, an advance that could dramatically reduce the amount of energy needed for crude oil

Next-generation geothermal energy: Promise, progress, and challenges

New facility to accelerate materials solutions for fusion energy

The new Schmidt Laboratory for Materials in Nuclear Technologies (LMNT) at the MIT Plasma Science and Fusion Center accelerates fusion materials testing using cyclotron proton beam

Geothermal energy, a clean, continuous energy source accessible in many locations, has been slow to catch on. Nearly 2,000 years ago, the Romans made extensive use of geothermal

Making clean energy investments more successful

New research emphasizes the importance of well-validated models and forecasting tools in evaluating choices for investments in clean energy technologies and policies by governments and

Contact Us

For catalog requests, pricing, or partnerships, please visit: https://european-startups.eu